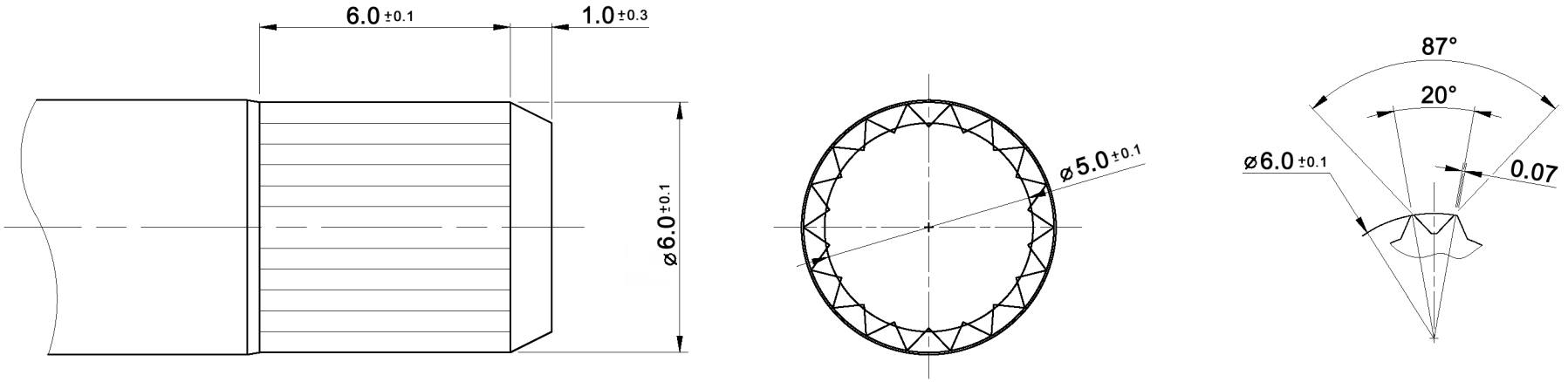

Tolerances:			Date	Name	MER(P) 12-xxxxx xx(-R) knurled shaft	
			03/09	dr		
			knitter-switch		30 17 51	Page 1/1
Modifications	Date	Name				