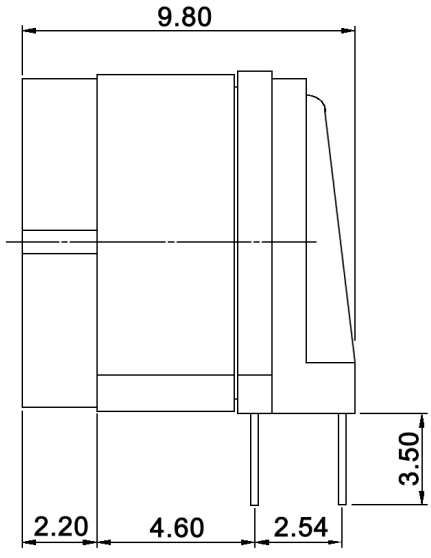

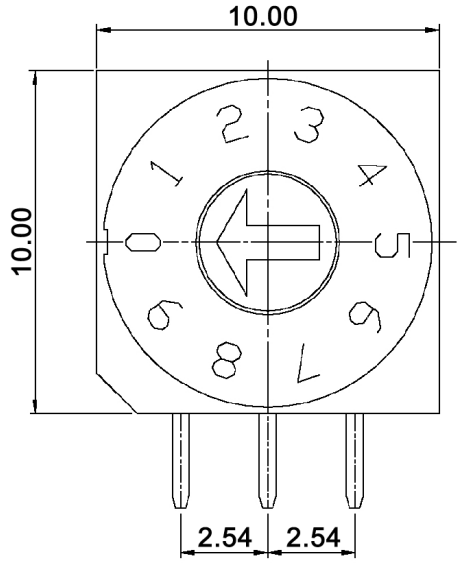

BCD

		Real coded				
		C	1	2	4	8
10 Positions	0	●				
	1	●	●			
	2	●		●		
	3	●	●	●		
	4	●			●	
	5	●	●		●	
	6	●		●	●	
	7	●	●	●	●	
	8	●				●
	9	●	●			●

P.C.B. LAYOUT

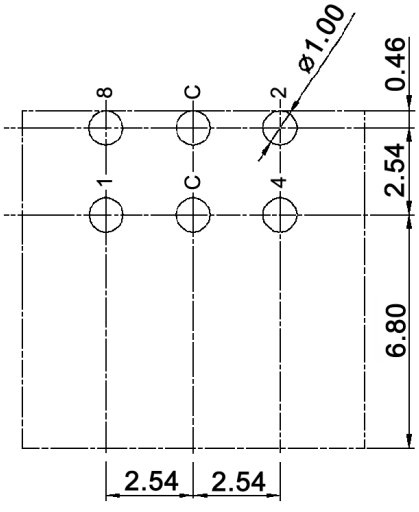

Specifications:

Contact rating:	non-switching: 400mA, 24V switching: 150mA, 24V
Contact resistance:	80mOhm max.
Insulation resistance:	100Mohm min. at 250V DC for 1 minute +/-5sec.
Dielectric strength:	250V AC (50/60Hz) for 1 minute
Operating temperature:	-40°C to +85°C
Storage temperature:	-40°C to +85°C
Electrical life:	10 000 steps
Operating force:	700gf/cm max.
Soldering conditions:	pre-heat: max. 120°C, max. 70sec. wave-soldering: max. 260°C, max. 10sec.
IP rating:	IP67
Material:	Cover / base: PA66 Actuator: POM, grey Contact / terminal: phosphor bronze, min. 0.07µm gold plated over min. 0.1µm nickel PCB: epoxy seal, min. 0.05µm gold plated O-ring: silicone

RoHS-conform EC 2002/95/EC

Tolerances: ≤ 10mm: ≥ 10mm:			Date 08/07	Name dr	DRR 60010-1
Revised	03/12	dr			
Soldering conditions	01/11	dr			
IP rating	06/09	dr	knitter-switch	30 11 91	Page
Operating temperature	11/08	dr			
Temperatures	01/08	dr			1/1
Modifications	Date	Name			