Actuator 00

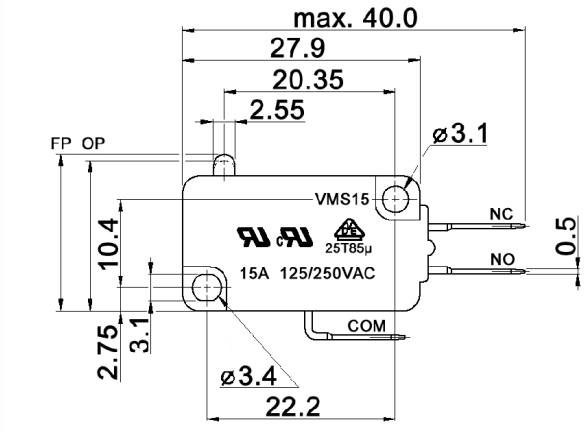

Actuator 01

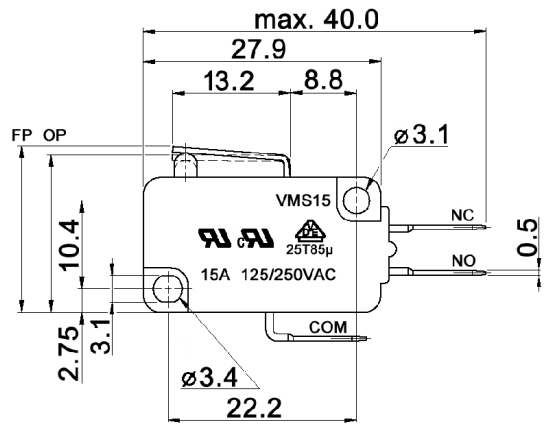

Actuator 02

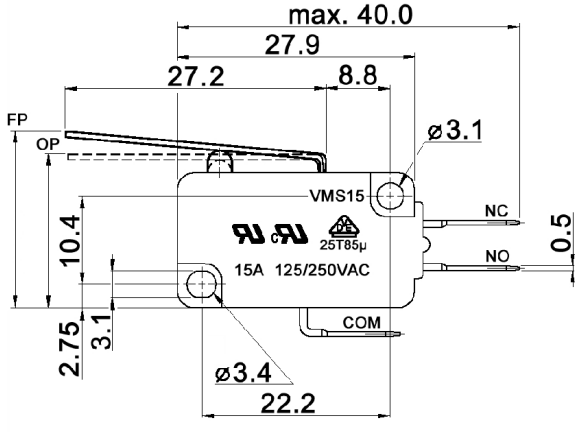

Actuator 03

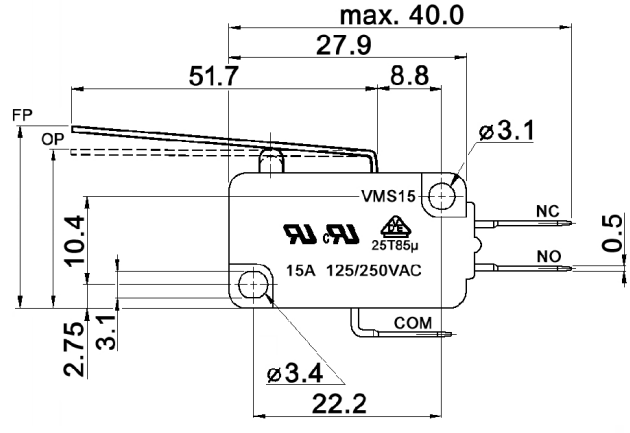

Actuator 04

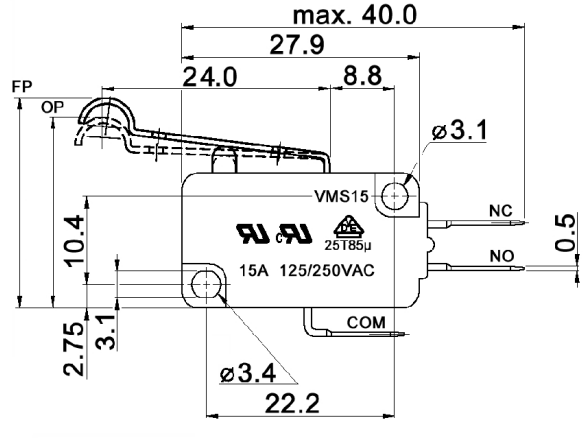

Actuator 05

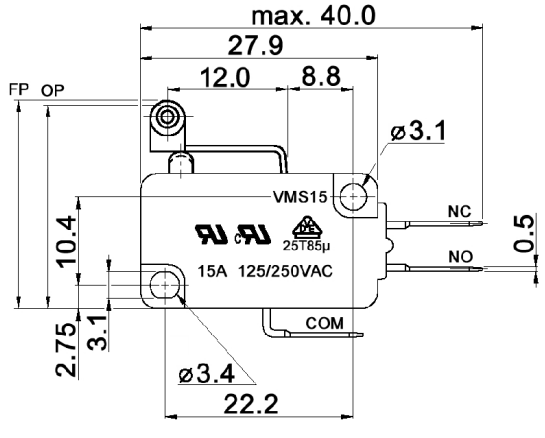

Actuator	Operation force [gf]			Free position [mm]	Operation position (OP) [mm]
00	100±30	160±40	250±50	18.35±0.5	17.45±0.5
01	100±30	160±40	250±50	19.05±0.5	18.05±0.5
02	45±20	75±25	120±40	20.75±0.5	18.25±0.5
03	25±10	40±15	60±25	22.55±0.5	18.05±0.5
04	50±20	85±30	140±40	23.95±0.5	21.75±0.5
05	100±30	160±40	250±50	24.45±0.5	23.45±0.5

RoHS-conform · 2002/95/EC

Tolerances: ±0.2mm	Date	Name
	08/10	dr

DM-VMS Actuator

knitter-switch

30 21 55

Page 1/1

Modifications	Date	Name