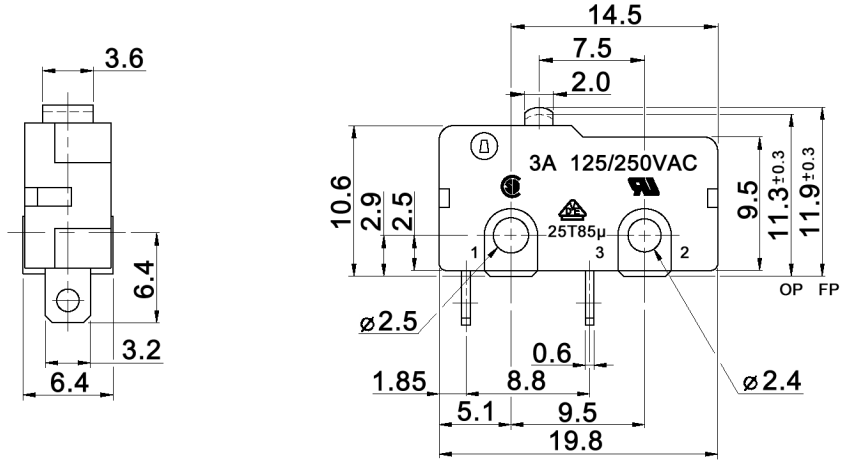

SCHEMATIC

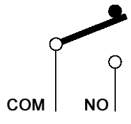

Specifications:

Contact rating:	3A, 125/250V AC
Contact resistance:	50mOhm max.
Insulation resistance:	100MOhm min. at 500V DC
Dielectric strength:	1000V AC for 1 minute
Operating temperature:	-25°C to +85°C
Mechanical life:	1 000 000 cycles
Electrical life:	10 000 cycles
Operating force:	190 +/-45gf

Tolerances: ±0.2mm			Date	Name	DM-SM3-00N-190S-2
			12/10	dr	
			knitter-switch	30 22 56	Page 1/1
Modifications	Date	Name			